The Influence of Scientific Applied Research on the Quality of Modern Studies, 2018, Vol. 1, No. 11, p. 106-117 (ISSN online 2538-8576)

WILL BITCOIN BECOME NEW MONEY OF AN INNOVATIVE DIGITAL AND ENTREPRENEURIAL SOCIETY?

Tomasz Zieliński

Department of Banking and Financial Markets, University of Economics in Katowice, Poland

Abstract

In view of significant loss of trust in the financial system as a result of the subprime crisis, the search for an alternative formula of money, independent of central governments and central banks, has intensified. Most of the emerging concepts refer to the idea of electronic money. The birth of Bitcoin in 2009 initiated the contemporary spectacular and dynamic history of cryptocurrencies. Its popularity seems to be stimulated mainly by the innovative nature of technology which, even in the era of information economy, is perceived as revolutionary and perspective. Enthusiasts of the new concept predict that the uniqueness of block-chaining technology will make cryptocurrency a new formula of the innovative digital and entrepreneurial society. On the other hand, skeptics see Bitcoin only as another novelty in the niche concept of alternative money. They often formulate the hypothesis that it is foremost an instrument of financial speculation, fulfilling the functions of money only to small extent. What is worse, they also claim that its expansion creates a new speculative bubble which may be the source of another financial crisis. These doubts are fundamental in answering the question whether Bitcoin will become new money of an innovative society. In the following part of the study, an analysis of data collected from the complete transaction database available through the blockchain.info portal will be conducted (https://www.blockchain.com 2018). For the purposes of this study, selected data for the period 2011-1Q 2018 will be analyzed.

Keywords: Bitcoin, money, bank, electronic money, monetary policy.

Introduction

The 2007 financial crisis intensified the search for a new money formula, independent of governments and banks. These searches gained in strength also due to the development of new electronic technologies, broadly used in the area of finance. The concept of electronic money, extremely heterogeneous, has for a long time occupied the minds of all economic life participants (Zadora, Zieliński 2012). The birth of Bitcoin in 2009 triggered dynamic history of cryptocurrencies driven by the expectation that due to the unique technology and exceptional functionality they will become new money in an innovative digital and entrepreneurial society. Critic, however, formulate the hypothesis that Bitcoin is primarily an instrument of financial speculation fulfilling the functions of money only to a limited extent.

The main subject of this article is Bitcoin, considered as the most spectacular case of cryptocurrency. The main purpose of the study is to verify the hypothesis that there are insufficient evidence to consider Bitcoin as a full-value money. The verification of the assumed objective is based mostly on a statistical survey of the historical prices as well as of other parameters describing Bitcoin. Regarding statistical investigation, the scope of fulfilling by Bitcoin of the various functions of money was subject to a critical discussion.

Next Step in Electronic Money Evolution - Model Approach

The term "electronic money" for many years has been accompanying the transformation of the economy moving from industrial rules towards information oriented approach based on up to date technology. Initially, the term "electronic money" was understood as "a set of information and telecommunications techniques that enable the cash (capital) flows without the use of paper documents between banks, business units and consumers." As a consequence of such a wide approach, all forms of making payments or settlements that use IT infrastructure can fall within this category. The expansion of the Internet and mobile electronic devices has contributed to the significant semantic differentiation of the term "electronic money" in recent years (Zieliński 2014). Their generic feature is, in most cases, a close connection with the non-cash form of bank money.

The key factor differentiating various forms of electronic money refers mostly to the organization and the facilitating circulation.

The most popular electronic money schemes are based on the circulation of money deposits between bank accounts (pict.1). Electronic money understood in this way is a set of electronic means enabling the customer to have convenient access to banking money deposited to a bank account and being under the bank's permanent control.

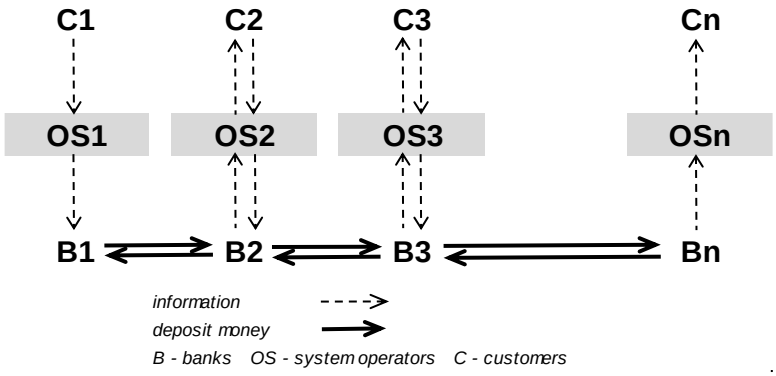

1 picture. *Information and bank money flow in payment models based on the bank money layer (payment cards without the electronic wallet function, mobile payments, electronic banking, online banking). (Source: Own elaboration)*

Such types of solutions include payment transactions executed via electronic channels of access to bank accounts or payments made with the use of payment cards. Their strong dependence on the efficiency of the banking settlement infrastructure and vulnerability to its limitations have prompted the search for faster and cheaper solutions. Some of them, in particular micropayment and pre-paid systems, moved the circulation layer from the level of the bank account to the level of the system operator (pict. 2).

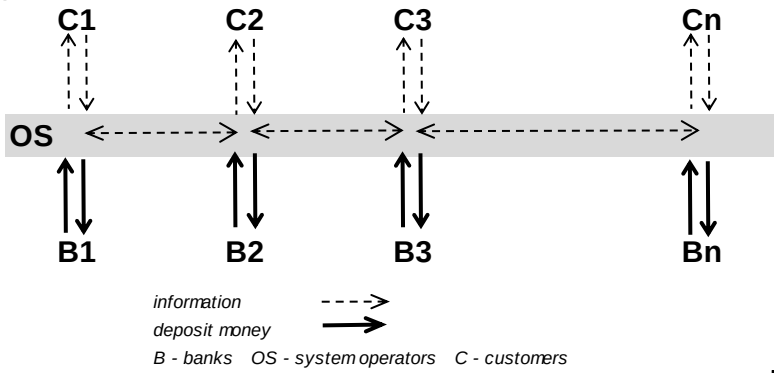

2 picture. *The flow of information and bank money in payment models based on the system operator's layer. (Source: Own elaboration)*

In such a model, the function of the system operator is taken over by a separate commercial entity running an independent system of virtual accounts on which information about the financial obligations of the system operator towards individual participants is stored. Electronic money in that system circulates by adjusting records on virtual accounts of participants, and thus is only executed in the operator's IT system, without involving the interbank settlement mechanism. Monetization of balances stored in virtual accounts is made at the request of the system participant.

The turning point (Implications For Central Banks 1996) in the process of the electronic money evolution has been the initiation of the concept shifting the circulation from the bank or the operator layer directly to the customer level (pict.3) (Zieliński 2015).

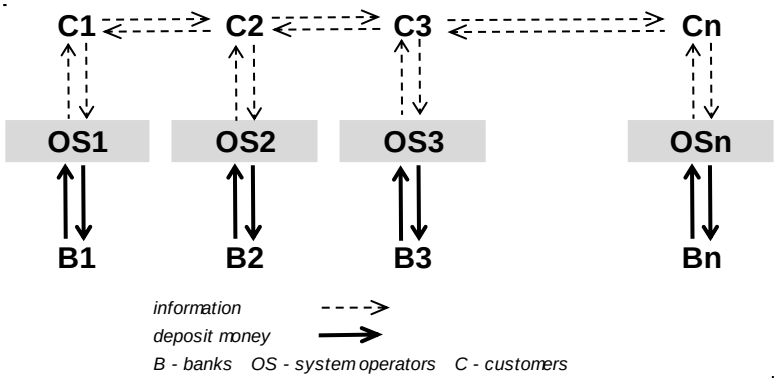

3 picture. *The flow of information and bank money in electronic payment models based on the client's layer. (Source: Owen elaboration)*

The key idea of this concept of electronic money is to make mutual payments in a way similar to traditional cash ("from wallet to wallet"). As a result, solutions belonging to this category are sometimes referred to as "electronic cash". Units representing the purchasing power of money are stored on customers' cards with the electronic wallet capability, on personal computer disks, in mobile phones or tablets and circulate directly between them like traditional cash. This makes the payment parties completely free of obligation to communicate with the banking layer or system operator. At any time, however, electronic cash can be exchanged for traditional cash or a non-cash deposit in a bank account. Numerous payment innovations facilitating the discussed models, referred to as electronic money, in fact do not create a new money supply, but only improve the circulation of bank money. The situation is different in the case of alternative currencies (sometimes referred to as local currencies) created outside the banking sector (pict. 4). The inspiration to look for alternative (in the monetary sense) money models emerged from the criticism of the mechanism of regulating the money supply at the national (or supranational) level without taking into account the real needs of local communities (M.Kennedy 2004). It could be expected that the local currency would definitely better serve the inhabitants of the region. "This is a vision of the money system in which, apart from the common central currency, there is a whole range of local currencies. By their very existence, they establish significant barriers to the negative effects (for the local communities) posed by central money." (Reichel 1997)

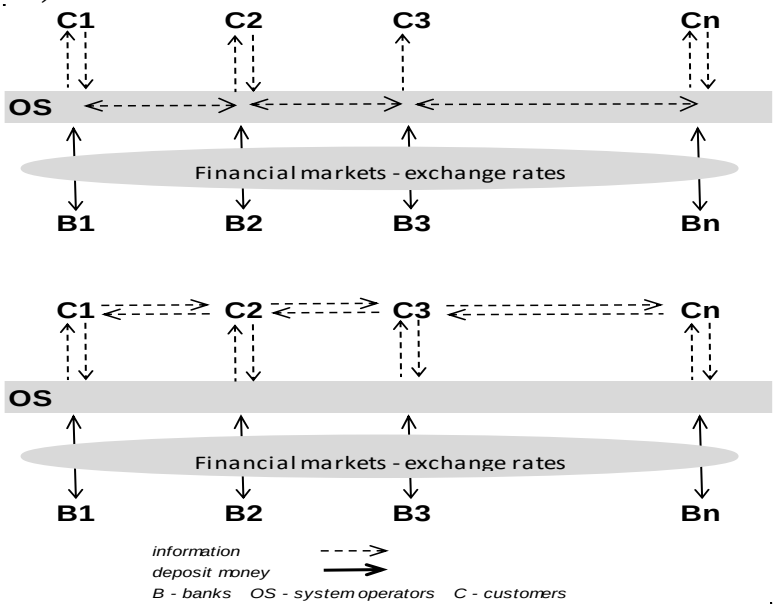

4 picture. *The flow of information and money in payment models based on alternative currency. (Source: Own elaboration)*

In contrast to previously discussed systems, alternative money models don't have direct communication with the bank money layer. Both creation and transfer of units can be done at the level of the system operator layer (as in micropayment systems) or at the customer level, directly between electronic money instruments.

A historical example of an alternative currency often invoked is the LETS (Local Exchange Trading System) used in the 1980s at Courtenay (British Columbia, Canada) (Reichel 1997). New LETS units appeared automatically on the account of the participant who sold the goods or services. On the other hand, the buyer of a good or service made payments in LETS units at a fixed price. Thus, money supply was directly linked with the scale of economic activity of a community. Similar assumptions accompanied the creation of the *Ithaca HOUR* system in the United States. The currency was based on the hourly wage rate in the region. The Ithaca banknotes had the following denominations: 1/8, 1/4, 1/2, 1 and 2 "Hours". Determining the price of goods and services based on the hourly system was contractual and did not have to weight directly the time required to produce them. In both cases (LETS and Ithaca Hours) there were no fixed exchange rates for any traditional currency. Exchange transactions could only be concluded on the agreed price conditions.

The birth of Bitcoin

In view of significant loss of trust in the financial system as a result of the subprime crisis, the search for an alternative formula of money, independent of central governments and central banks, has intensified. Most of the emerging concepts refer to the idea of electronic money. The birth of Bitcoin in 2009 initiated the spectacular and dynamic history of cryptocurrencies. Its popularity seems to be stimulated mainly by the innovative nature of technology which, even in the era of information economy, is perceived as revolutionary and perspective. Enthusiasts of the new concept predict that the uniqueness of block-chaining technology will make cryptocurrency a new formula of the innovative digital and entrepreneurial society. Skeptics, on the other hand, see Bitcoin only as another novelty in the niche concept of alternative money. They often formulate the hypothesis that it is foremost an instrument of financial speculation, fulfilling the functions of money only to small extent. What is worse, they also claim that its expansion creates a new speculative bubble which may be the source of another financial crisis.

The key issue of the dispute between the two parties is control over the money supply. Traditional money systems are fiduciary, managed by a third "trust" party in a centralized system. Central banks and commercial banks, through the money creation mechanism, control the scale of money issue. Money settlements are a core business and the basic source of income for the whole banking system. The contemporary financial sector may, therefore, not be interested in changing the money-creation framework that will deprive it of its profits. "They are the great intermediaries. The masters of the monetary universe. No one is getting into the system without the knowledge and the permission. So it has been for thousands of years." (Tucker 2017) Supporters of the new idea emphasize that Bitcoin and other cryptocurrencies violate the unfavorable (in their opinion) status quo. "Bitcoin changes all that. Download a wallet, find a friend, and you are the owner of a currency that can buy anything in the world, from anywhere in the world. It's more than that: any individual can raise capital, without intermediaries, without JP Morgan." (Tucker 2017) Bitcoin perfectly fits into the model of alternative electronic money. Therefore, the key questions are: who, if not the central bank, will control its supply, what will be the mechanism of determining the purchasing power of a new currency and whether its stability ensures fulfillment of both functions- as a store of value and medium of exchange. The least controversial is the circulation facilitating function, commonly presented as the main advantage of block-chain technology.

Concluding, these doubts are fundamental in answering the question whether Bitcoin will become new money of an innovative society. In the following part of the study, an analysis of data collected from the complete transaction database available through the blockchain.info portal will be

conducted (https://www.blockchain.com 2018). For the purposes of this study, the data for the period 2011-1Q 2018 will be analyzed.

Supply of BTC Units

In the terminology of monetary policy, the number of currency units in circulation is understood as "money" in a broad sense. This approach refers to the so-called statistical definition of money which is based on money supply, consisting of cash in circulation and deposits in commercial banks, which altogether can be used to make payments. According to the statistical theory of money, aggregate measures are defined, usually beginning with the supply of reserve money of the highest power (M0). Supplemented with less liquid money supply, they create M1, M2 or M3 measures. Regardless of the aggregate, issue of money in the banking system refers to the real growth of the economy. It means that only the increase in supply corresponding to the GDP growth allows maintaining real and stable value of money. Otherwise, too rapid growth in money supply could cause inflationary pressures

Bitcoin's creation is based on a completely abstract mechanism, which is unrelated to the rate of economic development. Both, the size and pace of the creation, are limited arbitrarily by the parameters of the encryption algorithm in the process referred to as "mining of new Bitcoin units".

Pict. 5 shows the total number of Bitcoins that have already been mined; in other words, the current supply of Bitcoins on the network. The figure also compares the supply of BTC units with the line of hypothetical currency growth at a rate of 5%, representing constant GDP growth. Even this relatively high rate is not consistent with the historical increase in the supply of BTC.

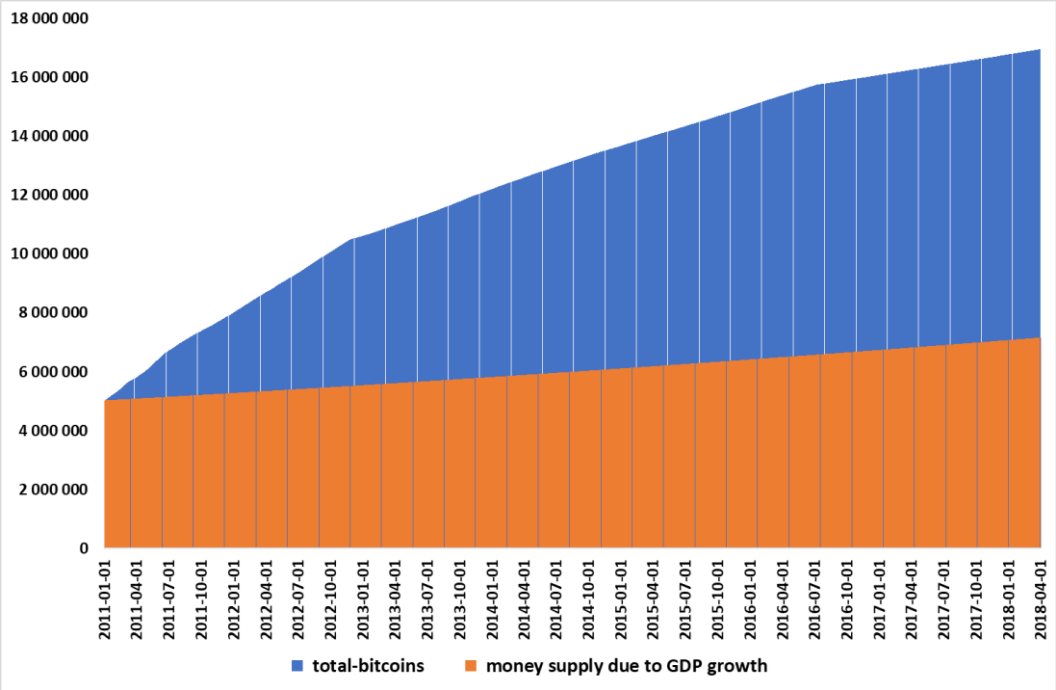

5 picture. *Bitcoins in circulation (BTC units)*
(Source: blockchain.info)

Such dynamic growth in the supply of the digital currency would normally have to cause inflation. Bitcoin however is not creating and developing new economy, but is rather taking over existing markets and replacing the existing currencies. Theoretically, it is possible to imagine a situation that, as Bitcoin takes over new space for the circulation and payment functions, the supply of "traditional" currencies could turn out to be excessive over time. In such a case, the banking systems would be forced to limit the creation of traditional banking money to prevent inflation processes in their native currencies. For banks, this would be extremely undesirable. Money trading and creation are one of the basic sources of income for banks.

Theoretically, a stable level of prices of goods and services could be maintained thanks to a correspondingly dynamic increase in the number of transactions made in Bitcoin units. The sharply growing number of confirmed daily Bitcoin transactions (pict.6) could suggest that such a scenario is likely in case of Bitcoin expansion.

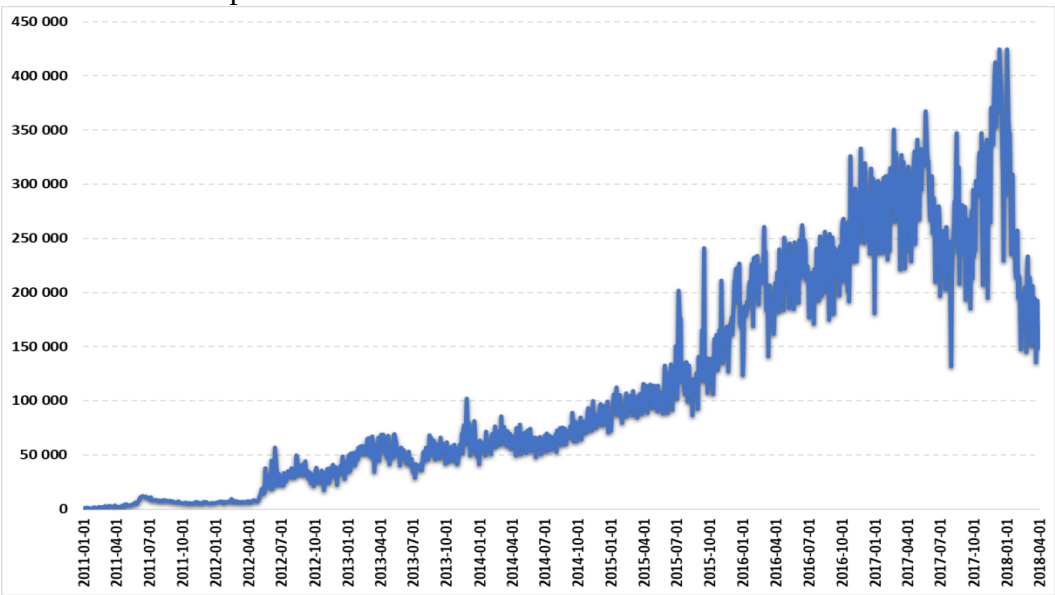

6 picture. *Confirmed number of transactions per day*
(Source: blockchain.info)

In practice, however, due to still relatively low Bitcoin trading scale, the substitution with other currencies is not significant. In addition, similar and even higher growth rate of the daily number of transactions, compared to the increase in the number of units, does not cover two key aspects:

1. changes in the BTC exchange rate to other currencies
2. the average BTC value per transaction

These issues will be discussed later on in the study.

What is Fair Value of a BTC Coin?

The key factor opening the discussion on the monetary nature of Bitcoin is the dynamic growth and extremely high volatility of the exchange rates between BTC and traditional currencies (in particular USD). These phenomena pose fundamental questions about the sources of the purchasing power of cryptocurrency. Despite of the many critical voices, it is hard to deny that monetary system based on trust and credit, at least in principle, cares of ensuring the balance between money supply and economic growth. In the case of Bitcoin, the rules limiting its issue seem to contradict economic principles developed for hundreds of years. Answering the question about fair value of BTC, during an interview for the Reuters Global Investment Outlook Summit in Tokyo (November 16, 2017) Japan Post Bank Chief Investment Officer Katsunori Sago suggested that his bank could consider buying the digital currency if it falls below $100 (Uetake, Sano 2018). Also prominent American author and finance commentator Jim Rickards has taken a dim view of Bitcoin. On the 10 of November 2017 he tweeted: "Bitcoin could go to $8000, $10,000, or $20,000. It doesn't matter because it will end up at zero. Neanderthals had their day too."[1] The question could be asked: is there any way to determine the real Bitcoin value?

The analysis of numerous opinions seeking the answers to this question allows distinguishing two basic approaches that can be described as "rational" and "emotional". An example of a rational approach is the methodology proposed by Credit Suisse analyst Damien Boey who developed a valuation method for Bitcoin combining two seemingly unique factors: the size of the Bitcoin

[1] https://twitter.com/jamesgrickards/status/929216931416150016

network, and the yield spread on BBB rated bonds. To start with, he tested the thesis that Bitcoin increases in value as more people use the network, similar to social media giant such as Facebook. At the same time, he provided some evidence suggesting that sometimes the number of users is derivative of Bitcoin's price, rather than the other way around. Since he found that Bitcoin prices have strong negative correlation to BBB credit spreads (the difference between the yield on BBB rated debt and US government bonds), he completed the model with this extra factor to make forecasting more accurate (Jacobs 2018). According to the Credit Suisse model, Bitcoin's fair value turned out to be almost half of its market price. Also according to alternative approach, based on Metcalfe's law of network valuation (Wheatley et al. 2018), Bitcoin's market capitalization might fall as much as $44 billion, or 35%, by the end of 2018.

On the other hand, proponents of "emotional" approach claim, that when analysts start to estimate Bitcoin, they come across two main problems. "Firstly, Bitcoin is rarely used for buying anything. It is impossible to estimate its value in exchange because nowadays transactions include only buying and selling BTC units. Bitcoin is not exchanged for anything else because of the permanently changing price. The total number of Bitcoin transactions over the past year added up to less than one-tenth of 1 % of total e-commerce transactions. Secondly, considering a store of value, analysts came across another problem. They compared cryptocurrency with silver and gold, but while we can hold metals, we cannot hold Bitcoins. Amounts of metals and cryptocurrency are not comparable either Cryptocurrencies do not have underlying value like metals. Bitcoin cannot be guaranteed by an issuing body because there is not any." (Dobrova 2018) These arguments lead to conclusion that the value of Bitcoin is created only emotionally by users' fascination with cryptocurrencies.

Appreciation and Volatility of Bitcoin Purchasing Power

It seems that many theoretical doubts about Bitcoin do not bother its followers. If only the prices in BTC units were stable, even against the paradigms, it could hurt the theory rather than the popularity of Bitcoin. Without any questions or doubts, Bitcoin could therefore be popular means of payment.

Unfortunately, the prices behave extremely different. "Owners of Steam, one of the leaders in selling computer games on the Internet say, they will no longer accept the cryptocurrency because of its swift and shocking changes in price" (Griffin 2017). The rapid changes in the BTC-USD ratio force sellers to constantly change prices quoted in BTC. This means that Bitcoin did not achieve the status of an autonomous currency since its purchasing power is constantly expressed rather in USD not in BTC itself. Thus, the process of stabilizing the prices of goods and services in USD generates unacceptable extra costs of using BTC as means of payment.

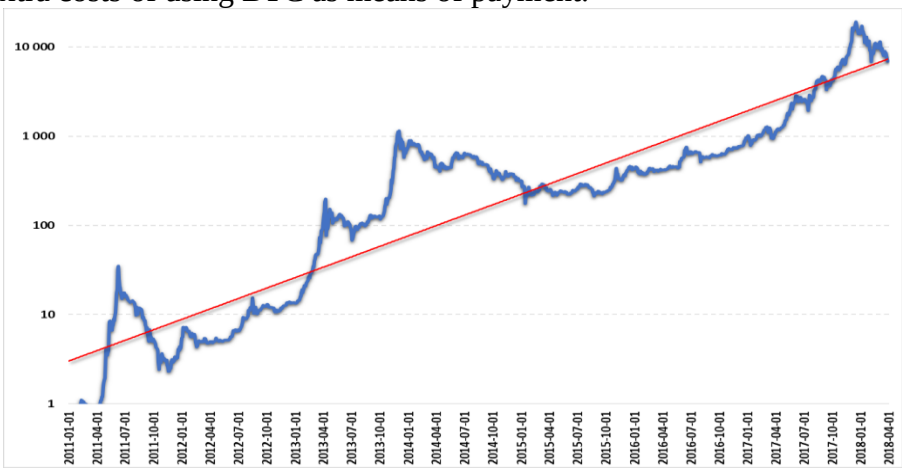

7 picture. *Market Price of BTC unit (USD)*
(Source: blockchain.info)

The problem of strong appreciation and volatility also affects the limited possibility of using Bitcoin as a store of value, which is by the book expected to increase in value, but not with excessive volatility. Extremely dynamic Bitcoin's appreciation against USD (pict.7) in the period from 2011 to Q1 2018 indicates a ten-fold increase in prices approximately every 2 years.

The increase in the value of the entire Bitcoin market is equally strong. The total USD value of Bitcoin supply in circulation, as calculated by the daily average market price across major exchanges, is presented in pict.8. Due to increase in the number of BTC units, the growth rate of market capitalization is even higher. A ten-fold increase of capitalization happens every 1.5 years.

8 picture. *Market Capitalization (USD)*
(Source: blockchain.info)

As the price of the digital currency continues to smash through new and new record highs, hitting unbelievable price levels, a growing number of commentators are drawing parallels to the largest asset bubbles in history: The Dutch Tulip Bubble (1636), The South Sea Bubble (1711), Japan's Real Estate and Stock Market Bubble (1980s), The Dot-Com Bubble (2000), The US Housing Bubble (2006) (Picardo 2018). Particularly spectacular is the parallel to the Dutch "tulip mania" of the 17th century (Chung 2017), which is considered the first example of an economic bubble (Sooke 2016) and is rated as the largest and most irrational in history. According to GlobalFin and Convoy analysis, Bitcoin is rising even faster than any asset class we have seen for over the last 400 years (pict.9).

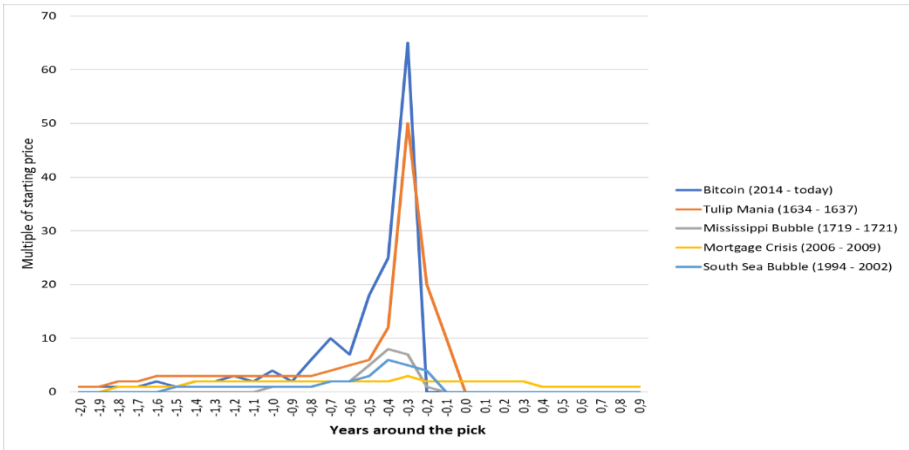

9 picture. *Rise and fall of some famous asset bubbles*
(Source: Elliot Wave International, Yale SOM, St.Louis FRED, GlobalFin and Convoy analysis, convoyinvestments.com)

As compared to historical descriptions of asset bubbles, Bitcoin's appreciation is the most violent. Therefore, without counter-arguments, one should expect that, as always in history, after a

sharp increase, there will be a painful decline. The main question is at what level and how dynamically this downturn will take place.

An additional argument for the inevitability of this speculative bubble burst is the very high volatility associated with the dynamics of Bitcoin's appreciation. Pict.10 compares the volatility of the daily rates of return of two currency pairs: BTC-USD and EUR-USD.

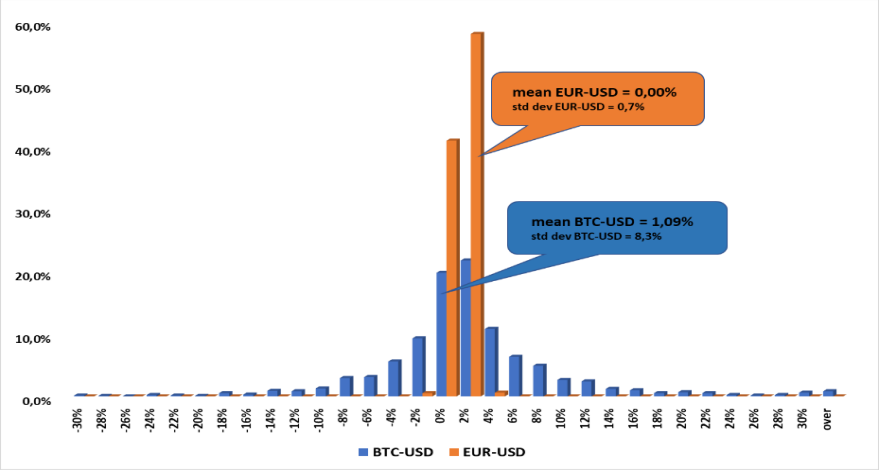

10 picture. *Volatility of BTC to USD vs. EUR to USD*
(Source: Own elaboration)

Extremely speculative nature of the probability distribution of daily rates of return for BTC can be also compared to the daily returns of the DJI stock index. Also in this case, the dispersion of BTC distribution is much higher than the volatility of the stock index. At the same time, average value of the daily rate of return is many times higher than the rates of return from the index.

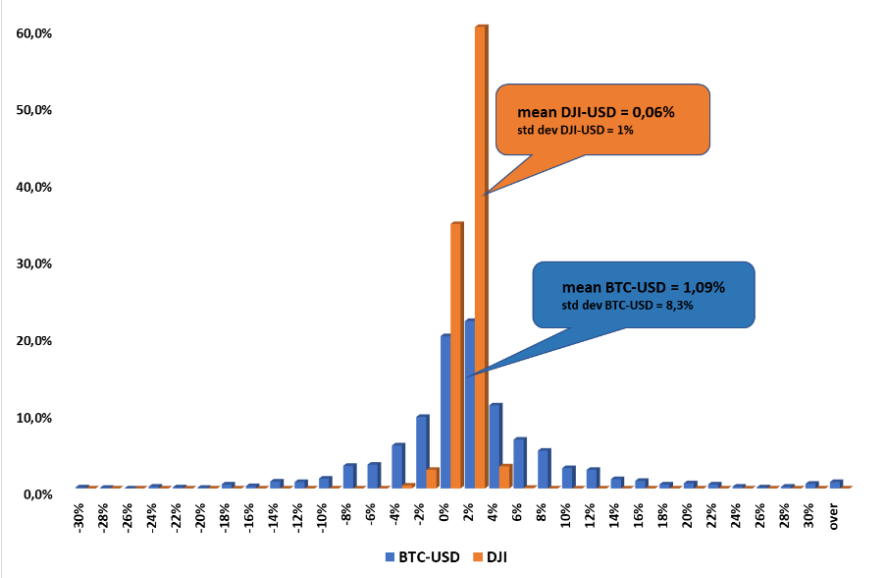

11 picture. *Volatility of BTC to USD vs. DJI to USD*
(Source: Own elaboration)

The examination of the presented data cause skepticism about considering Bitcoin as capable of fulfilling the functions of a store of value and medium of exchange. The highly speculative character of Bitcoin can also be proved by analysis of the average transaction value.

Average Transaction Value

Confirmation of doubts about the ability of Bitcoin to provide stable purchasing power is the strong upraise of the average value (USD) of a single transaction (pict.12). It was particularly dynamic

during the last year. It is hard to resist the impression that this was primarily due to the hopes for an increase in value, not from the growing transactional needs.

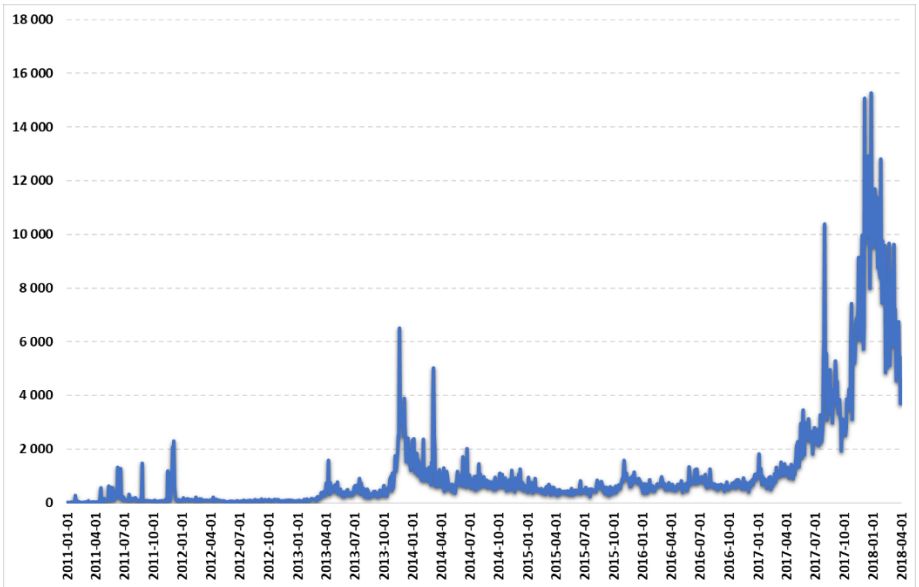

12 picture. *The Estimated Transaction Value in USD.*
(Source: blockchain.info)

This assumption is strongly confirmed in the analysis of the average volume of transactions (BTC). Over the whole analyzed period, the average number of BTC units used in individual transactions was permanently reduced. For the last two years it has dropped to the level close to 1 BTC (pict.13). It is difficult to explain it rationally with transactional needs related to payments for goods or services. Much more convincing is the argument of speculative expectations of BTC purchasers. Despite the high divisibility of BTC units, the value of 1 BTC seems to be a psychologically optimal level of single transaction record.

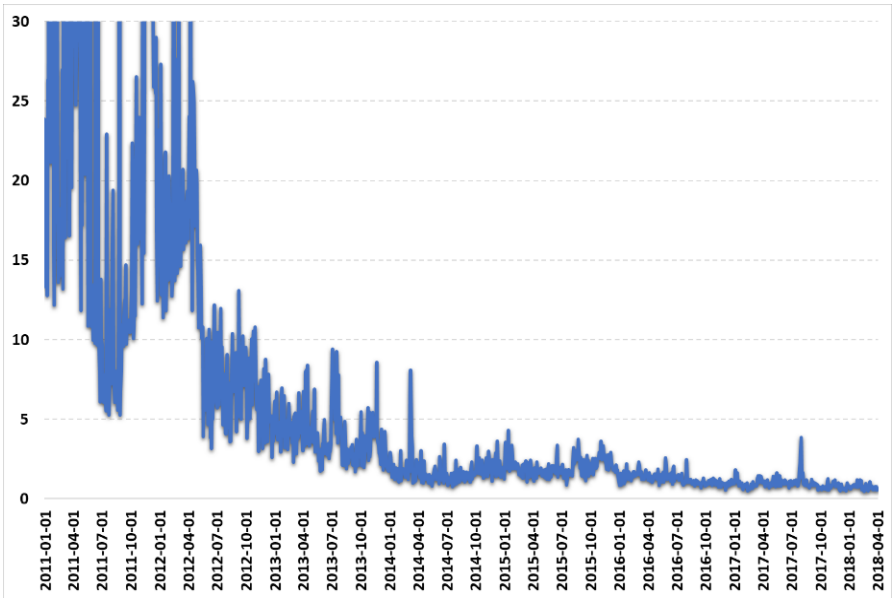

13 picture. *Estimated average transaction volume (in BTC)*
(Source: blockchain.info)

Moreover, the analysis of the subject-based structure of BTC transactions indicates a negligible share of transactions concluded in order to acquire goods and services. The vast majority

of them represent currency purchase transactions originated on specialized transaction platforms - Bitcoin exchanges (pict.14)

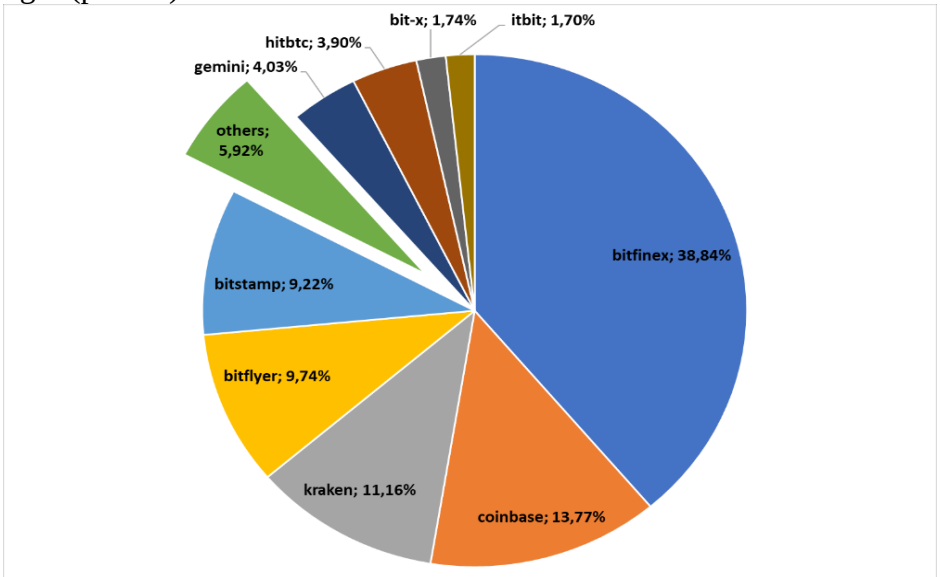

14 picture. *The structure of Bitcoin transactions*
(Source: data.bitcoinity.org https://data.bitcoinity.org/markets/volume/24h?c=e&t=b)

On top of that, Bloomberg analysts claim, Bitcoin acceptance among retailers is low and getting lower. Bitcoin owners are more and more reluctant to use the cryptocurrency given its rate of appreciation. "Way easier to trade speculatively than convince new merchants to accept the cryptocurrency." (Katz 2017)

The hesitance among retailers may also be linked to Bitcoin's scaling challenges, as transactions become slower and costlier. The consumer, rather than the retailer, bears that cost which can vary depending on how the transaction is conducted.

Conclusions

Concluding selected aspects of the analysis of statistical data on transactions with Bitcoin units, the following issues should be noted above all:

- inflation may result from dynamic increase in supply of BTC unlinked with economic growth indicators;
- a rapid and extremely volatile increase in the value of the Bitcoin units as well as of the entire market, is comparable with the cases of speculative bubbles;
- the volatility of the BTC unit's valuation exceeds the stock market index many times;
- inclination towards setting the average volume of a single transaction at the level close to 1BTC suggest speculative, not transactional nature;
- a small share of payment transactions with BTC, and dominance of transactions originated on the Bitcoin investment markets limit expectations of further expasion.

The observations explicitly confirm the common opinion that Bitcoin performs the function of money to a small extent only, becoming in fact an instrument of aggressive speculation. JP Morgan boss Jamie Dimon described the Bitcoin as a "fraud" only fit for use by drug dealers, murderers and people living in places like North Korea. During a New York conference he claimed he would fire "within a second" anyone at the investment bank trading in Bitcoin. "For two reasons: it's against our rules, and they're stupid. And both are dangerous," he was reported in The Guardian as saying (Monaghan 2017).

Surprisingly, even the BTC circulatory function is becoming heavily criticized. Although block - chain technology is the fundamental Bitcoin's marketing pillar, the growing value of the currency affected increasing fees that make payment more and more expensive.

Having considered the above arguments, what is the future of Bitcoin? Like everything in the information economy - unpredictable. It seems, however, that the most famous cryptocurrency will not break the monopoly of bank money. Over time, however, new technology, presumably with many improvements, will make many areas of the world economy innovate. Will there be a new money formula among them? Probably yes, but only if it is agreed with banks and governments. A war undertaken against their primacy is currently not in the interest of either party.

Reference List

Implications For Central Banks of the Development of Electronic Money (1996) BIS

Kennedy M., (2004). Pieniądz wolny od inflacji i odsetek - Jak stworzyć środek wymiany służący nam wszystkim i chroniący Ziemię?, Wydawnictwo "Zielone Brygady", Kraków

Monaghan A. (2017). Bitcoin is a fraud that will blow up, says JP Morgan boss, The Guardian, 13 September,

Picardo E. Five of the largest asset bubbles in history, www.investopedia.com

Reichel J. (1997). Rzecz o pieniądzu dla lokalnych społeczności, czyli małe jest najpiękniejsze, BZB nr 19, Wyd. „Zielone Brygady", Kraków

Wheatley S., Sornette D., Huber T., Reppen M., Gantner R.N. (2018). Are Bitcoin Bubbles Predictable? Combining a Generalized Metcalfe's Law and the LPPLS Model, ETH Zurich, Department of Management, Technology and Economics, Switzerland, Swiss Finance Institute, c/o University of Geneva, Switzerland, ETH Zurich, Department of Mathematics

Zadora H., Zieliński T. (2012). Współczesny pieniądz a kryzysy finansowe, Warszawa, Difin

Zieliński T. (2014). Dlaczego pieniądz elektroniczny pozostaje martwą koncepcją, Annales Universitatis Mariae Curie- Skłodowska, Sectio H, Oeconomia, vol. XLVII, 3, Lublin

Zieliński T. (2015). Rezygnacja z gotówki – nowy paradygmat pieniądza czy tylko innowacja w obszarze rozliczeń pieniężnych?, Annales Universitatis Mariae Curie-Skłodowska. Sectio H, Oeconomia 49/4

Electronic Dcuments:

Chung F.: 'Every generation gets sucked in: Bitcoin bubble worse than dotcom boom, price should be $US100', news.com.au, 22 November 2017, http://www.news.com.au/finance/money/investing/every-generation-gets-sucked-in-bitcoin-bubble-worse-than-dotcom-boom-price-should-be-us100/news-story/01e685ed268827e818a2dea9d9fb0c4a

data.bitcoinity.org

Dobrova D.: Does Bitcoin really have a fair value?, FBS Online Forex Broker, https://fbs.com/analytics/articles/does-bitcoin-really-have-a-fair-value-6402, 23.01.2018

Griffin A.: Bitcoin price surge leads steam to stop taking it as a payment. The cryptocurrency was intended to replace cash, but now can't be used to buy things on one of the internet's biggest shops. Thursday 7 December 2017, https://www.independent.co.uk

https://twitter.com/jamesgrickards/status/929216931416150016

https://www.blockchain.com/

Jacobs S., Credit Suisse says bitcoin's fair value is almost half its current price, Business Insider Australia, Jan. 17, 2018, http://www.businessinsider.com/credit-suisse-bitcoins-fair-value-is-almost-half-current-price-2018-1?IR=T

Katz L.: Bitcoin acceptance among retailers is low and getting lower, 12 lipca 2017, https://www.bloomberg.com/news/articles/2017-07-12/bitcoin-acceptance-among-retailers-is-low-and-getting-lower

Sooke A.: Tulip mania: The flowers that cost more than houses, 3 May 2016, BBC Culture, http://www.bbc.com/culture/story/20160419-tulip-mania-the-flowers-that-cost-more-than-houses

Tucker J.A.: Jamie Dimon Fears His Job Is Obsolete. Bitcoin will change everything about JP Morgan's market power., Thursday, September 14, 2017, https://fee.org/articles/jamie-dimon-fears-his-job-is-obsolete/

Uetake T., Sano H.: Bitcoin is a bubble, no plans to short-sell: Japan Post Bank CIO, Reuters, https://www.reuters.com/article/us-investment-summit-japanpost-bank-bitc/bitcoin-is-a-bubble-no-plans-to-short-sell-japan-post-bank-cio-idUSKBN1DG18L www.blockchain.info

Information about the Author

Tomasz Zieliński, PhD ing., senior lecturer, banking, risk management, e-finance, electronic money. *tomasz.zielinski@ue.katowice.pl*